04 BARBECUE AND KITCHEN

modularte

TIBERIO	pag. 4
NERONE	pag. 16
AUGUSTO	pag. 20
BANCO	pag. 22
BUFFET	pag. 26
HOLDER	pag. 28
PANCO	pag. 30
FABIA	pag. 32
KITCHEN	pag. 36
CREATE YOUR PROJECT	pag. 52
DATA SHEET	pag. 56
GRES	pag. 106
COLORS	pag. 109

01

TIBERIO

01 - TIBERIO

01 - TIBERIO

01 - TIBERIO EXTENSION

01 - TIBERIO EXTENSION

01 - TIBERIO EXTENSION

02

NERONE

02 - NERONE

03

AUGUSTO

04

BANCO

04 - BANCO

05

BUFFET

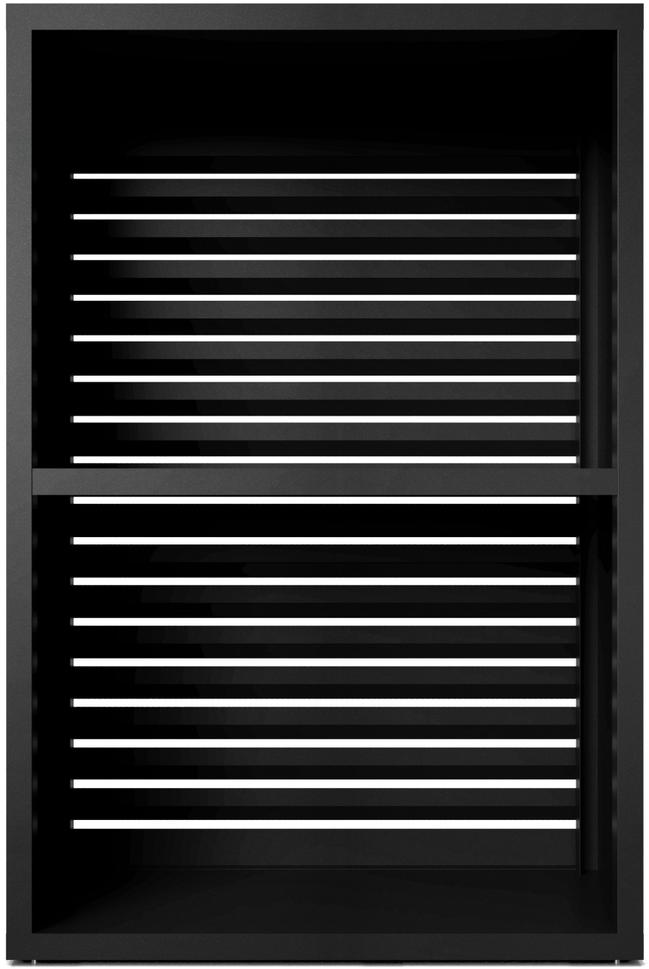

HOLDER

06 - HOLDER
80

06 - HOLDER
70

07

PANCO

08

FABIA

08 – FABIA

09

KITCHEN

09 - KITCHEN

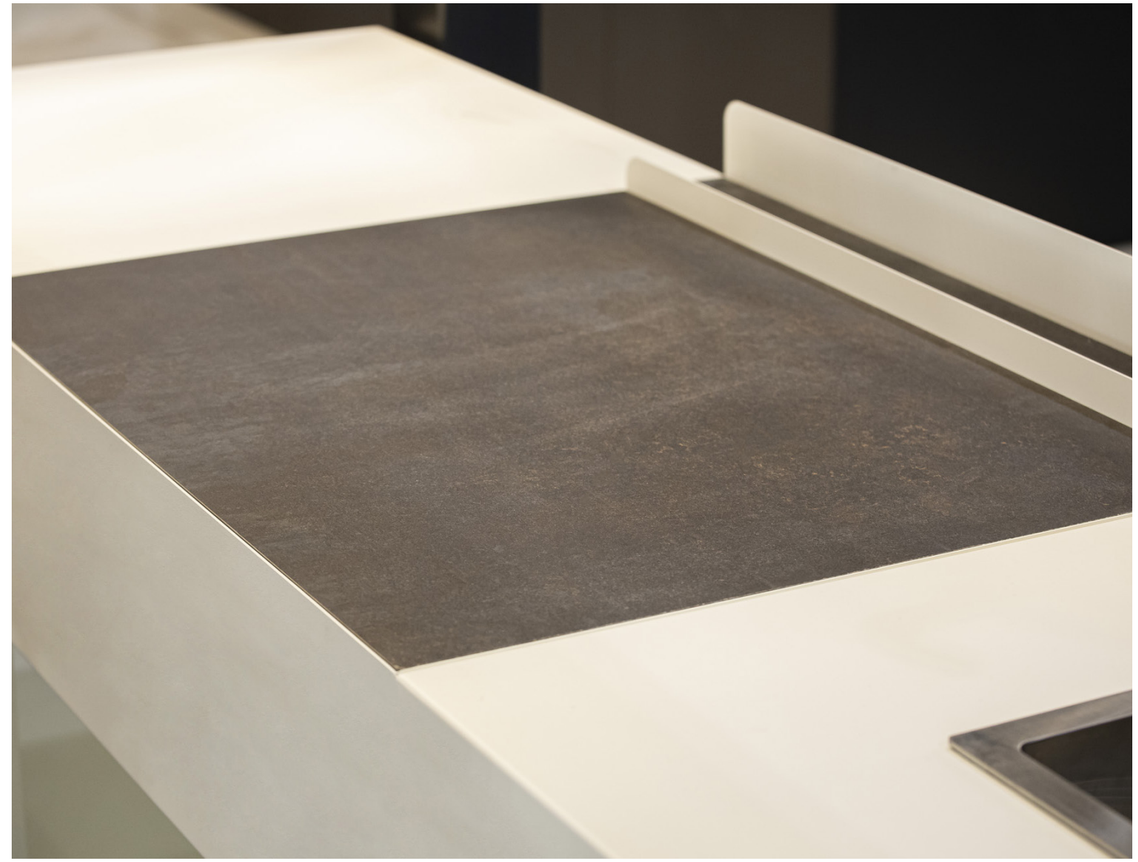

09 - KITCHEN

09 - KITCHEN

09 - KITCHEN

09 - KITCHEN

09 - KITCHEN

CREATE YOUR COMPOSITION

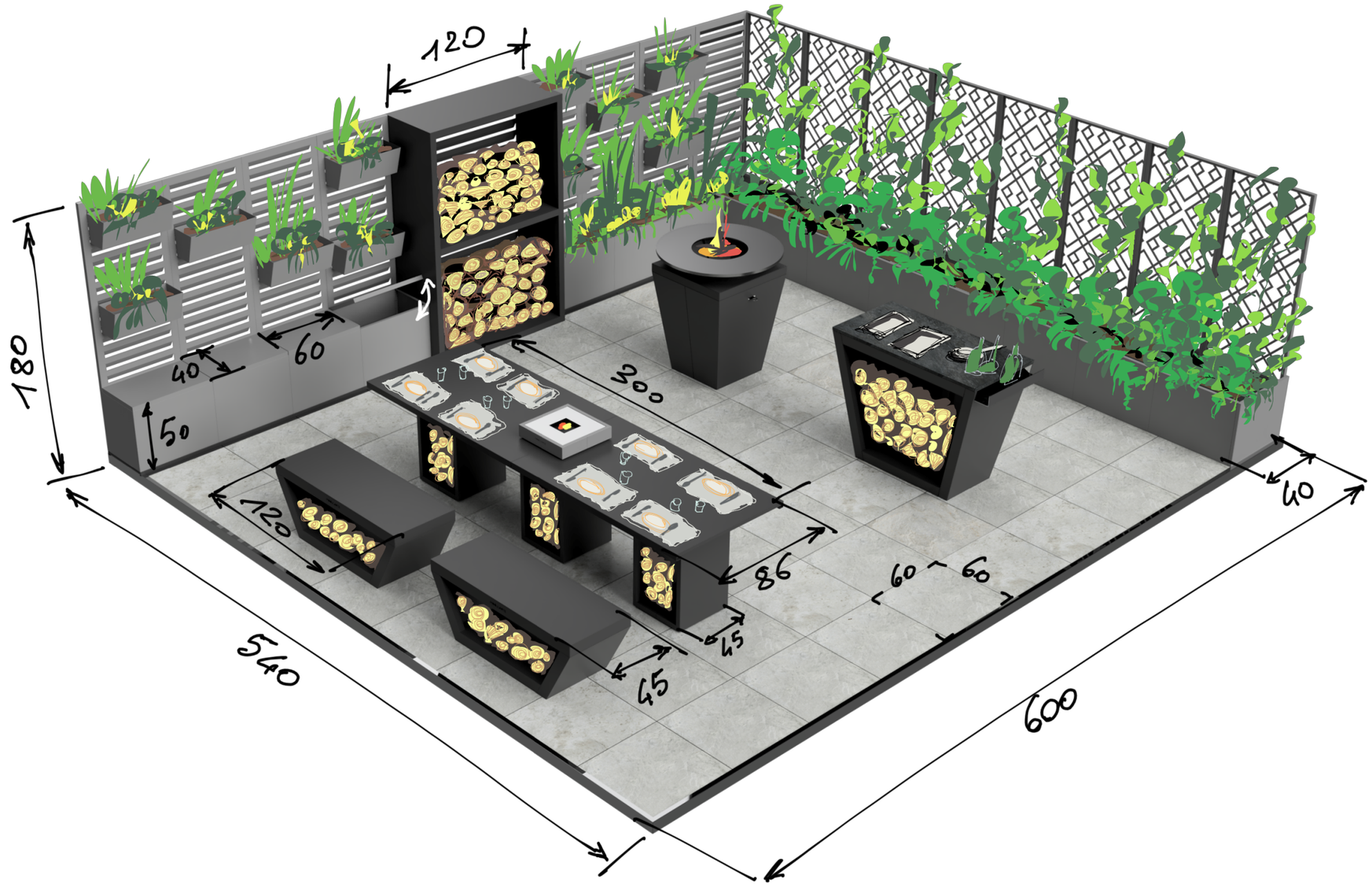
120
180
40
60
50
300
120
86
60
60
40
45
45
540
600

02

scherma
+
wally
banco
tiberio
buffet
tavola
panco

DATA SHEET

TIBERIO

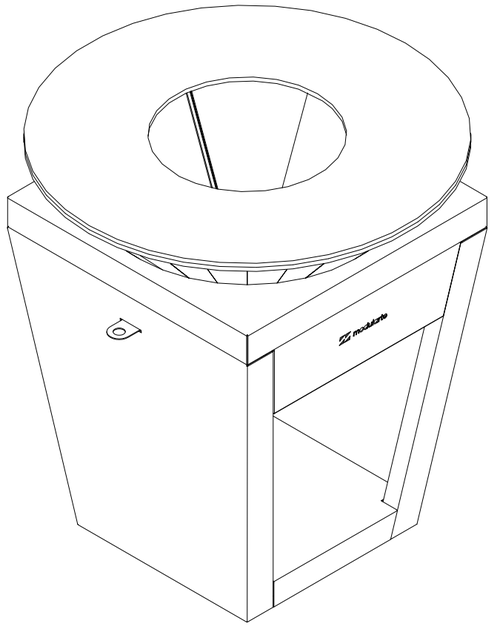

407-S-001	plate	**Ø 90** cm
	hole of plate	**Ø 40** cm
	thickness of plate	**1** cm
	weight	**110** kg
Included	1-403B-002	**ash tray**
Optional	1-410C-001	**combi base**
	1-410U-001	**combi grill**
	1-410U-002	**combi woak**
	1-410U-003	**combi skewers**
	425-S-006	**spatula**
Material	001	**galvanized steel**
	004	**cor-ten steel**

top base	**68x68** cm
bottom base	**46x46** cm
base height	**83** cm
total height	**95** cm
1-403Z-004	**air flow**
1-410U-004	**combi hook**
425-S-001	**abs cover**
425-S-004	**full cover**
1-402M-007	**cooking board**
425-S-007	**wood**

EXTENSION

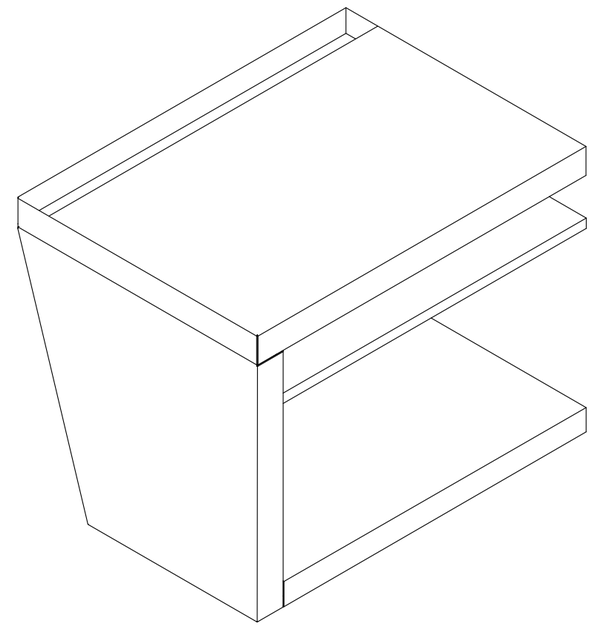

403-S-003	top base	**120x68** cm
	bottom base	**120x48** cm
	weight	**95** kg
Included	**gres choice in modularte catalog**	
Material	001	**galvanized steel**
	004	**cor-ten steel**

hole tools	**120x8** cm
height	**80** cm

NERONE

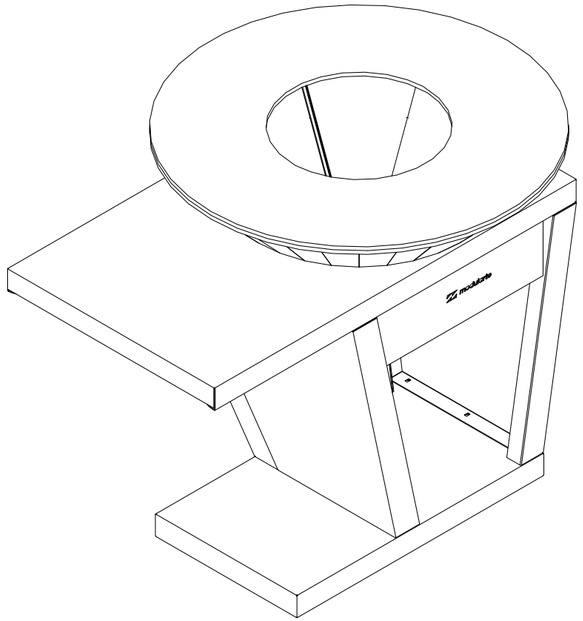

403-S-003	plate	**Ø 90** cm	top base	**110x68** cm
	hole of plate	**Ø 40** cm	bottom base	**75x46** cm
	thickness of plate	**1** cm	base height	**83** cm
	weight	**120** kg	total height	**95** cm
Included	1-403B-002	**ash tray**	1-403Z-004	**air flow**
Optional	1-410C-001	**combi base**	1-410U-004	**combi hook**
	1-410U-001	**combi grill**	425-S-001	**abs cover**
	1-410U-002	**combi woak**	425-S-004	**full cover**
	1-410U-003	**combi skewers**	1-402M-007	**cooking board**
	425-S-006	**spatula**	425-S-007	**wood**
Material	001	**galvanized steel**		
	004	**cor-ten steel**		

AIR FLOW

Reduced air flow

Increased air flow

COOKING CHAMBER PROTECTION

Material	001	**galvanized steel**
	004	**cor-ten steel**

COOKING BOARD

1-402M-007 **COOKING BOARD**

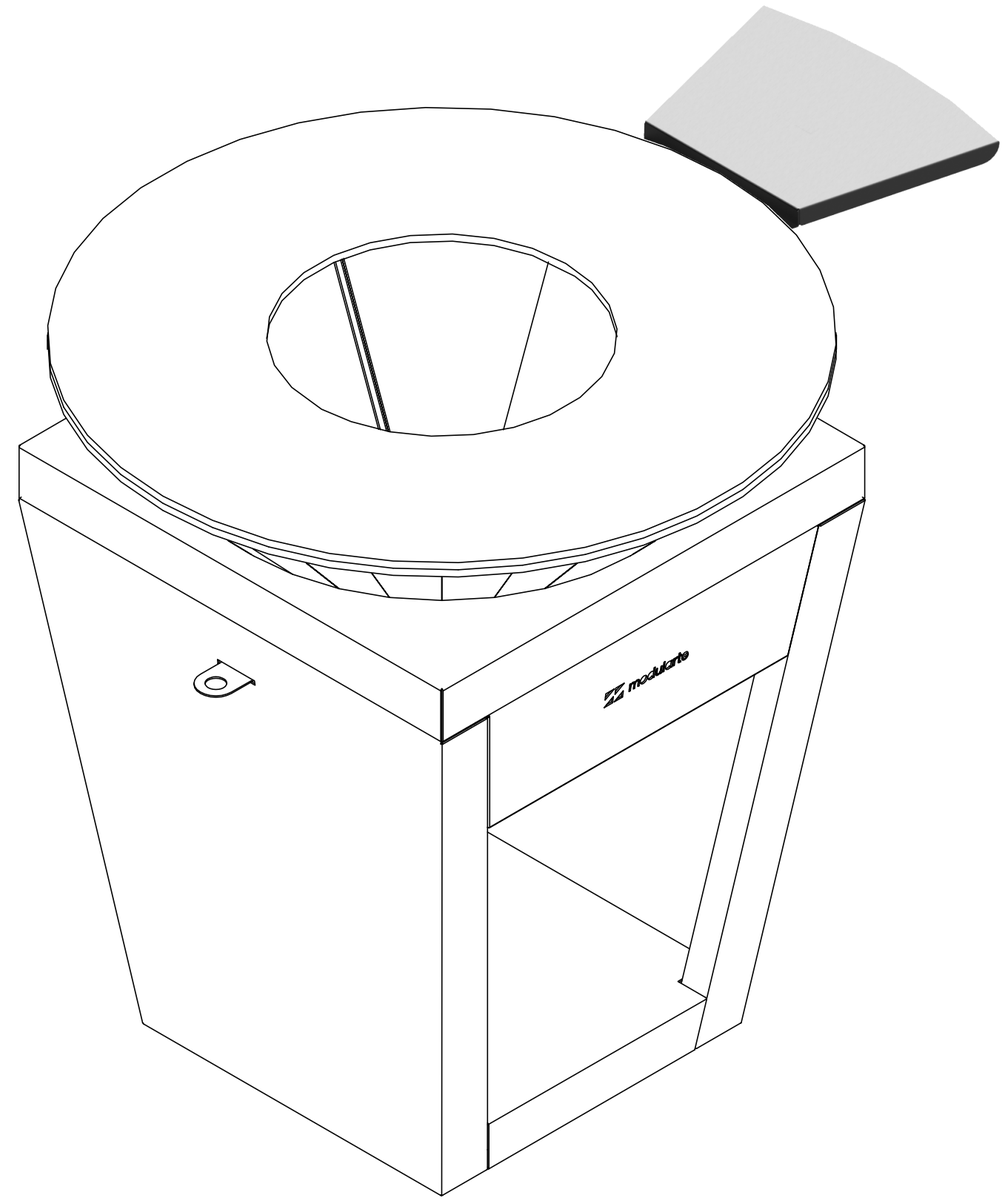

Material	001	**stainless steel**

ASH TRAY

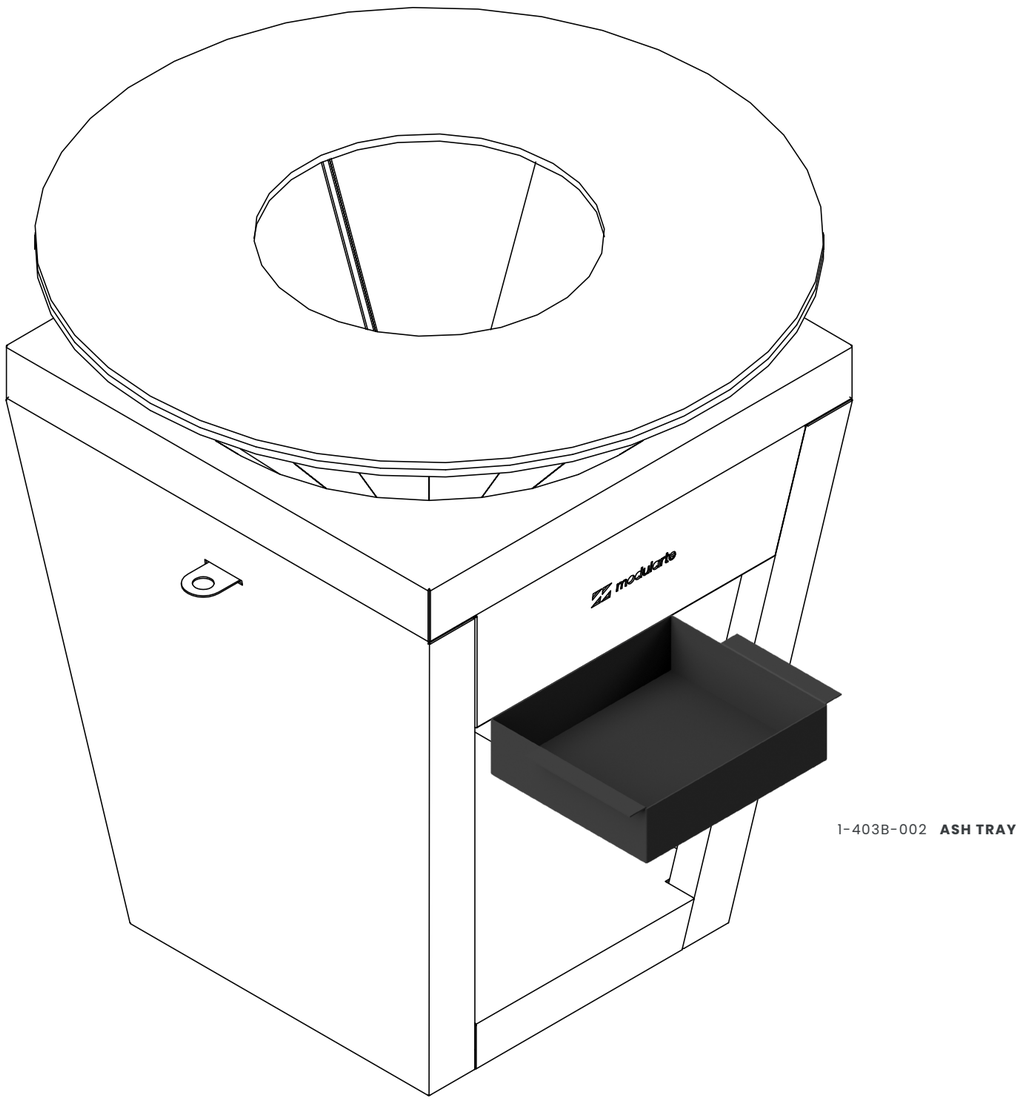

1-403B-002 **ASH TRAY**

Material	004	**cor-ten steel**

COMBI

1-410U-004 **HOOK**

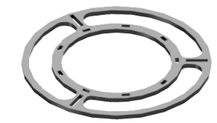

1-410U-002 **SUPPORT FOR WOKS**

1-410U-001 **GRILL**

1-410U-003 **SUPPORT FOR SKEWERS**

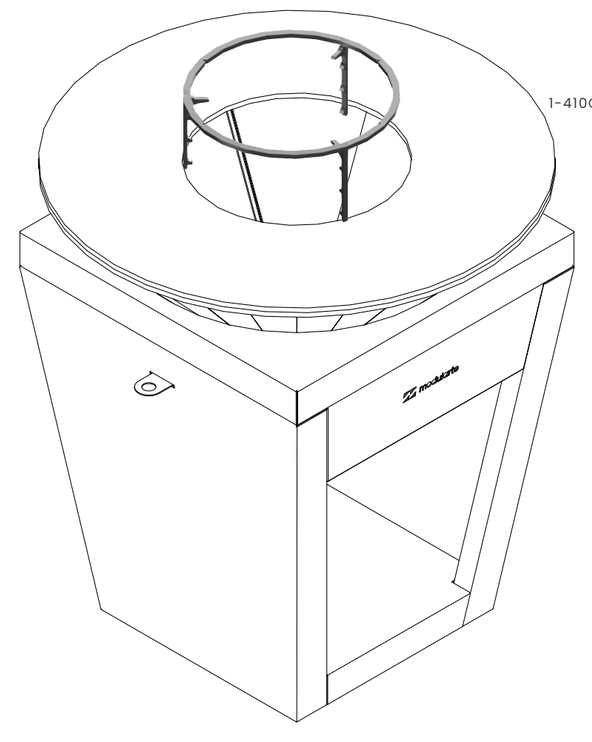

1-410C-001 **COMBI BASE**

Material	008	**iron**
	003	**stainless steel**

SPATULA AND SKEWERS

1-410U-005 **SPATULA**

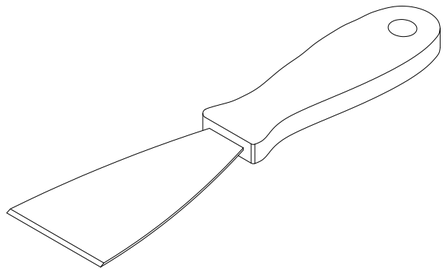

1-410U-006 **SKEWERS**

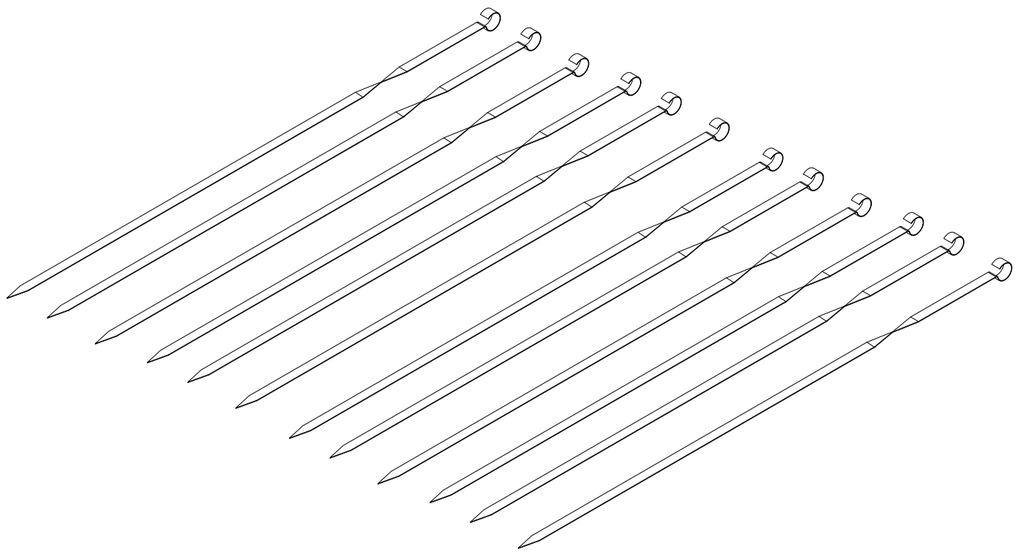

Material	008	**iron**
	003	**stainless steel**

ABS COVER

425-S-001 **ABS COVER**

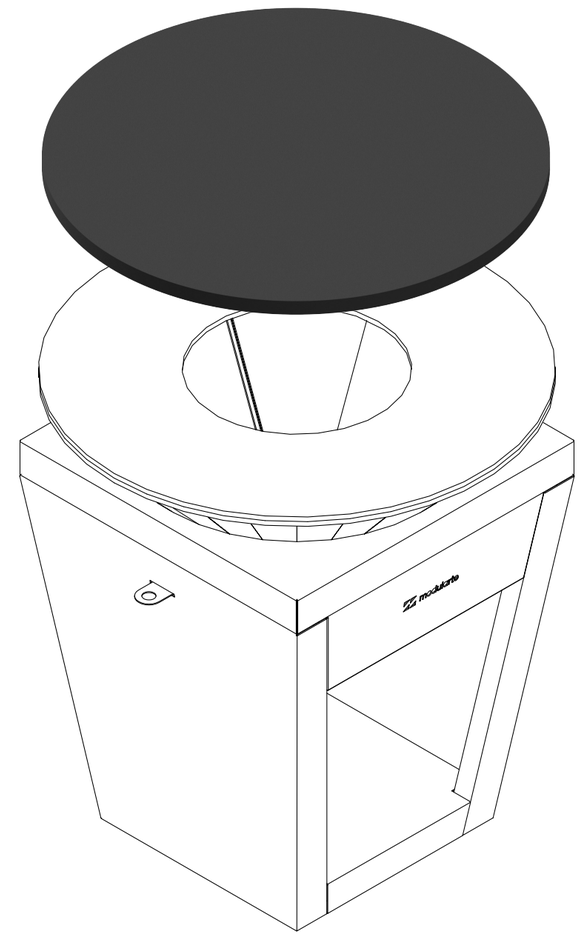

Material	009	**abs**

AUGUSTO

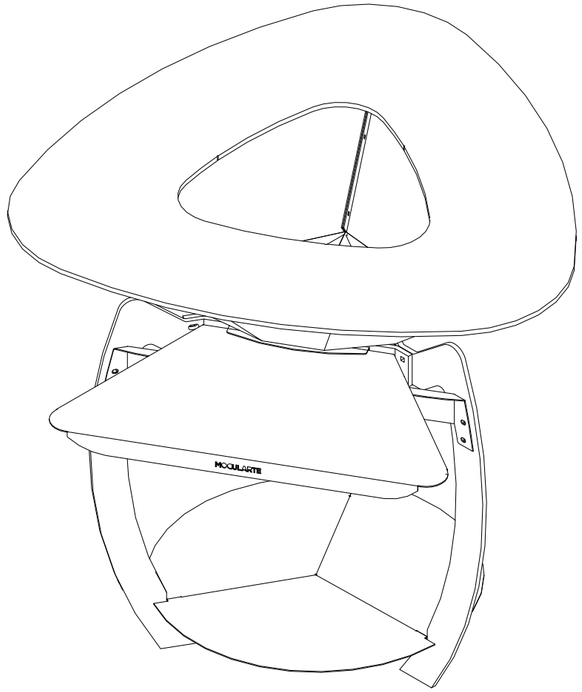

405-S-003	plate	**Δ 100x100x100** cm	bottom base	**53x53** cm
	hole of plate	**Δ 45x45x45** cm	base height	**70** cm
	thickness of plate	**1** cm	total height	**100** cm
	weight	**80** kg		
Optional	1-410C-001	**combi base**	1-410U-004	**combi hook**
	1-410U-001	**combi grill**	425-S-001	**abs cover**
	1-410U-002	**combi woak**	425-S-004	**full cover**
	1-410U-003	**combi skewers**	1-405M-005	**cooking board**
	425-S-006	**spatula**	425-S-007	**wood**

Material	001	**galvanized steel**
	004	**cor-ten steel**

ABS COVER

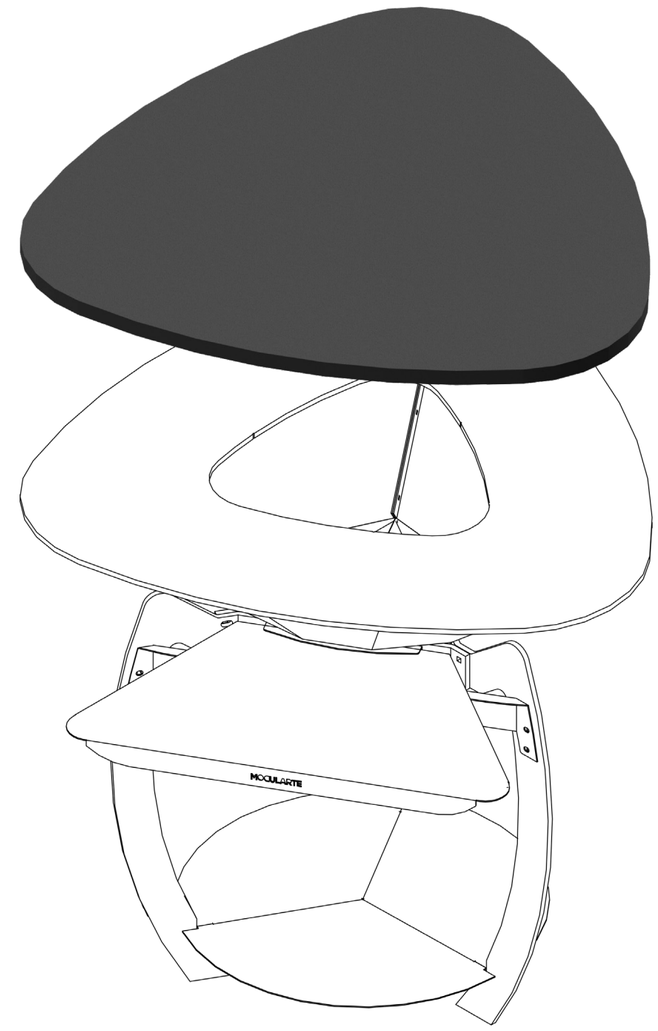

425-S-002 **ABS COVER**

Material	009	**abs**

TABLE TOP

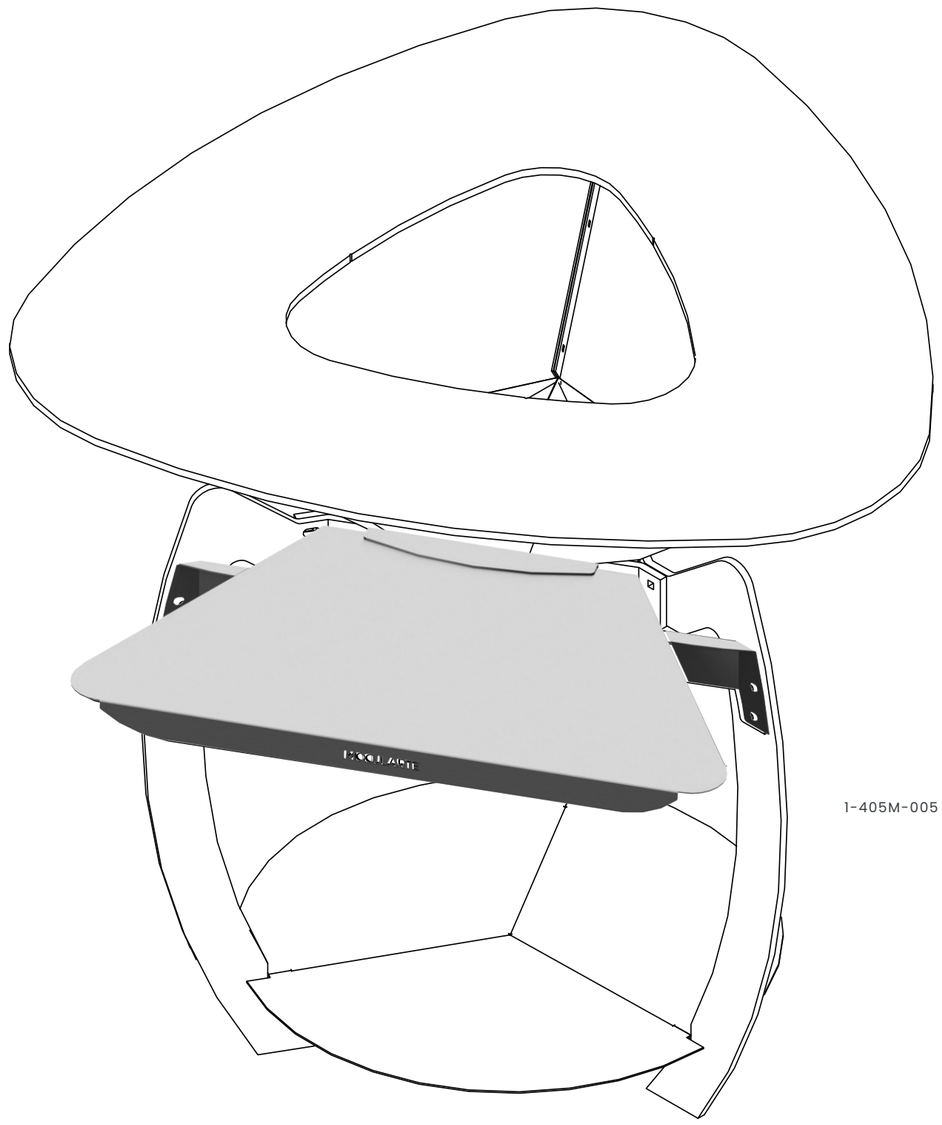

1-405M-005 **TABLE TOP**

Material	001	**stainless steel**

COOKING BOARD

1-402M-007 **COOKING BOARD**

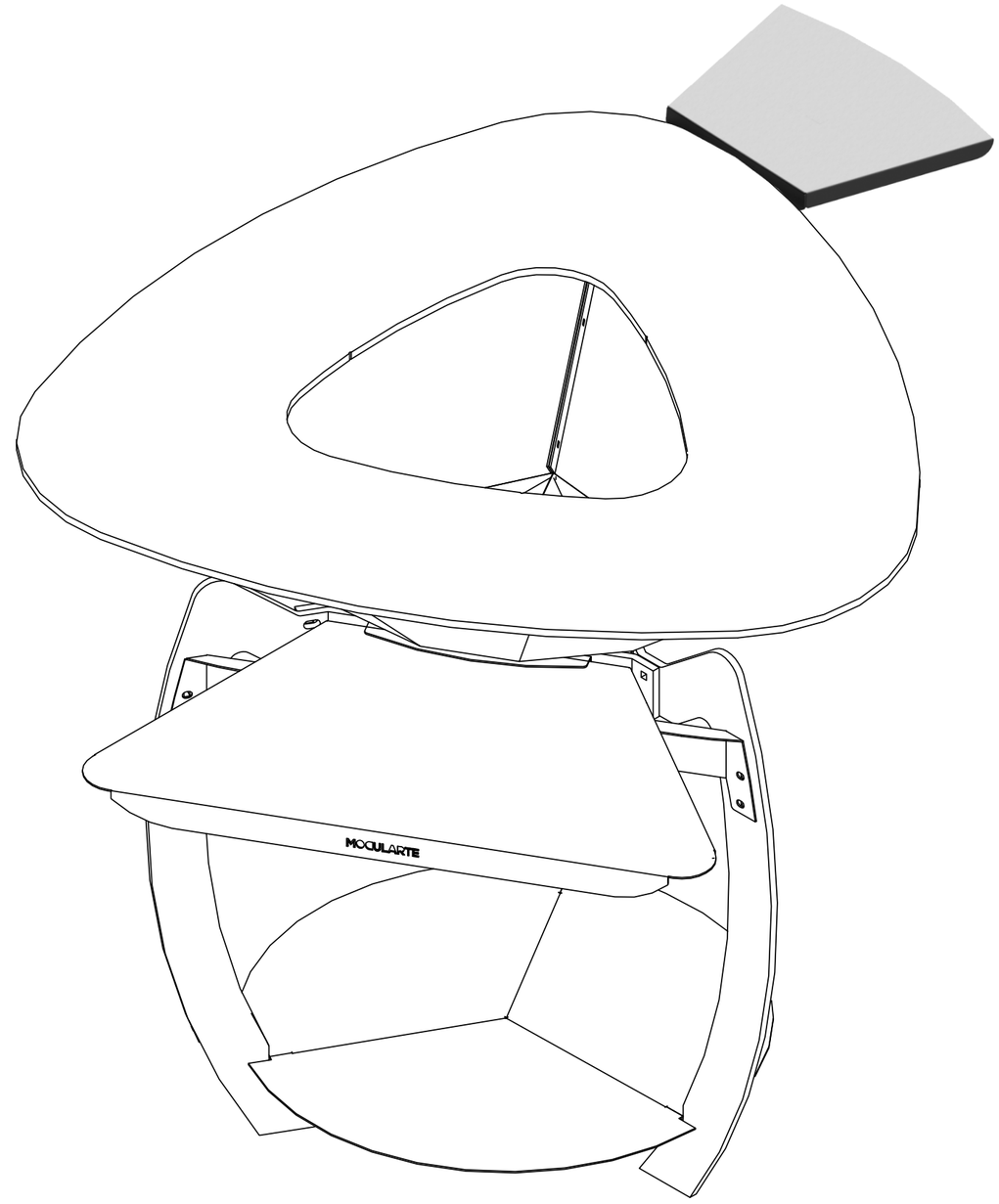

Material	001	**stainless steel**

BANCO

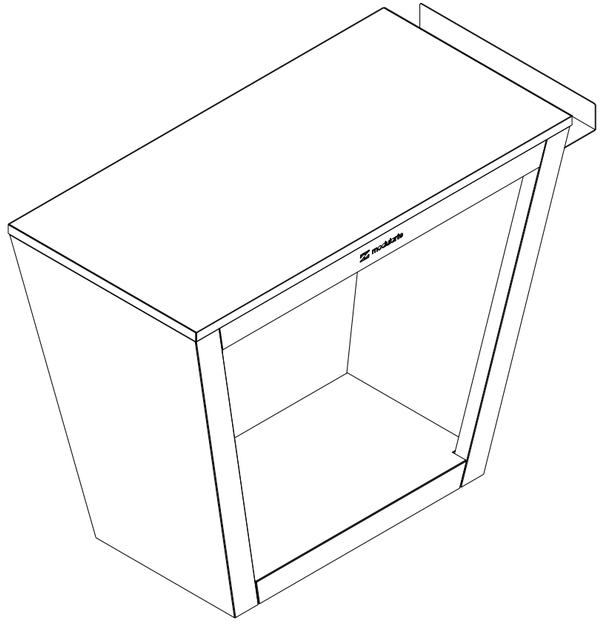

409-S-001	top base	**120x60** cm	weight	**90** kg
	bottom base	**80x45** cm	height	**93** cm
Included	1-403B-002	**gres**		
Optional	425-S-007	**wood**	1-409V-001	**tool tray**
Material	001	**galvanized steel**		
	004	**cor-ten steel**		

BUFFET

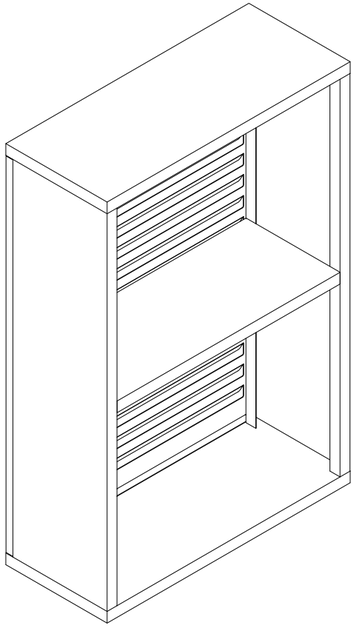

415-S-001	dimension	**120x50** cm	middle height	**90** cm
	weight	**60** kg	total height	**180** cm
Optional	425-S-007	**wood**		
Material	001	**galvanized steel**		
	004	**cor-ten steel**		

HOLDER

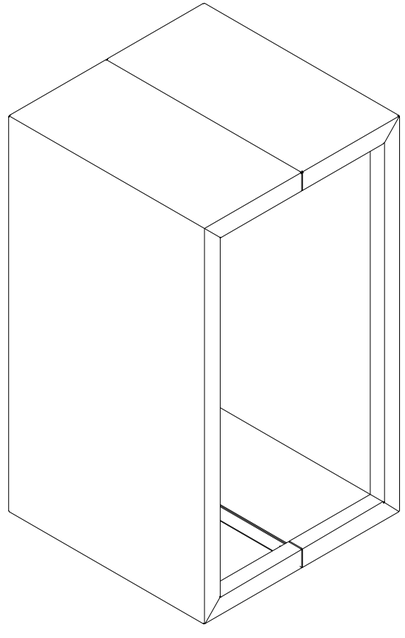

409-S-002	dimensions	**40x40** cm	weight	**14** kg
	height	**70** cm		
409-S-003	dimensions	**40x40** cm	weight	**16** kg
	height	**80** cm		
Optional	425-S-007	**wood**		

Material	001	**galvanized steel**
	004	**cor-ten steel**

PANCO

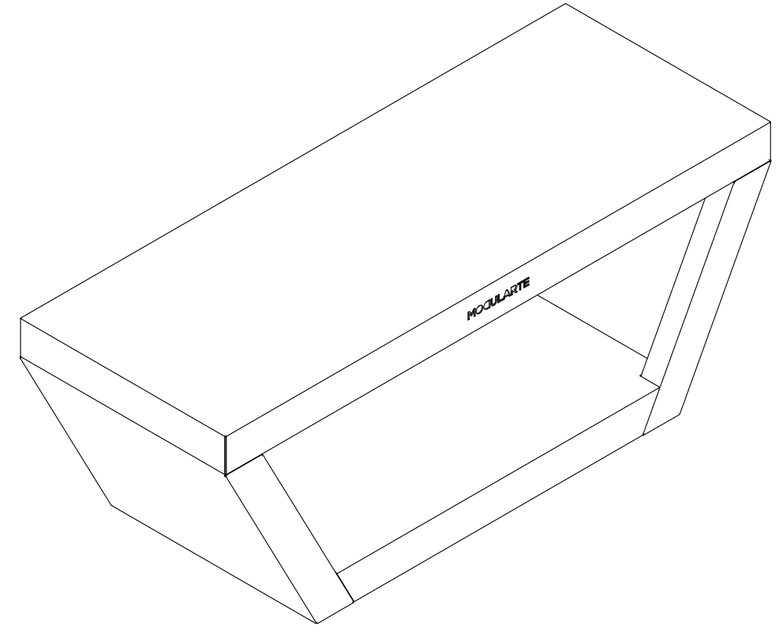

420-S-001	top base	**120x45** cm	height	**45** cm
	bottom base	**80x45** cm	weight	**22** kg
Optional	425-S-007	**wood**		

Material	001	**galvanized steel**
	004	**cor-ten steel**

FABIA

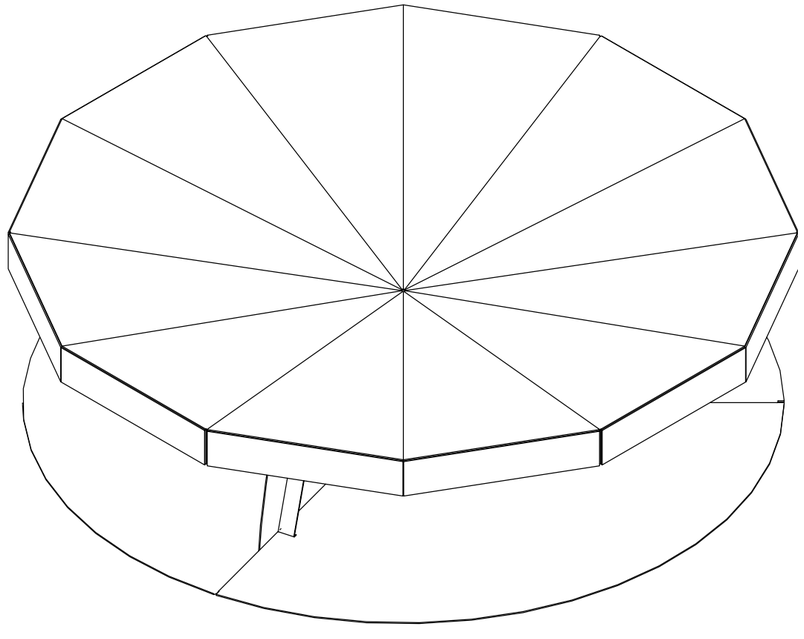

409-S-002	dimensions	**Ø 100** cm	weight	**44** kg
	height	**38** cm		
409-S-003	dimensions	**130** cm	weight	**130** kg
	height	**38** cm		
Optional	425-S-007	**grill**		

Material	001	**galvanized steel**
	004	**cor-ten steel**

COVER TABLE

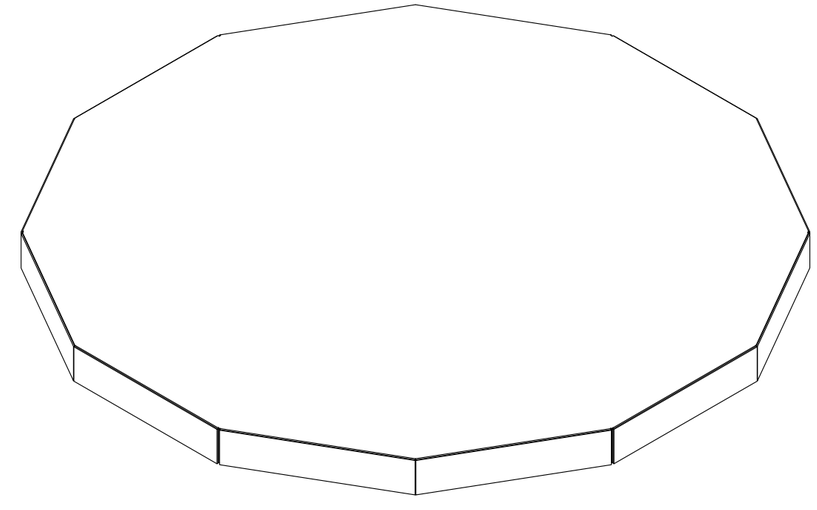

420-S-001	cover table	**Ø 100** cm	height	**7** cm
420-S-001	cover table	**Ø 130** cm	height	**7** cm

Material	001	**galvanized steel**
	004	**cor-ten steel**

GRILL

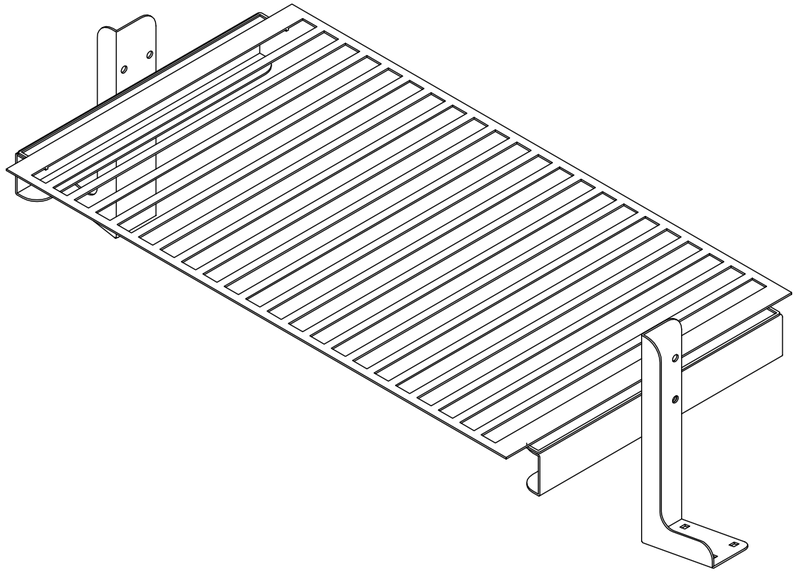

409-S-002	dimensions	**40x40** cm	weight	**14** kg
	height	**70** cm		
409-S-003	dimensions	**40x40** cm	weight	**16** kg
	height	**80** cm		
Optional	425-S-007	**wood**		

Material	001	**galvanized steel**
	004	**cor-ten steel**

DIAMETER OPTIONS

ø 130 cm

ø 100 cm

KITCHEN EXAMPLES

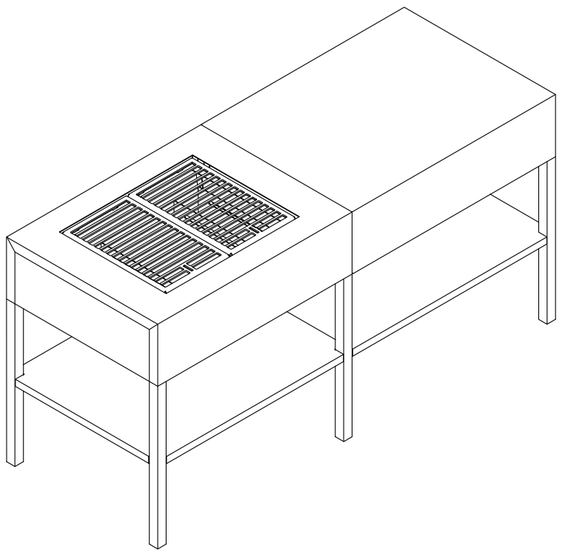

MODULE USED

460-S-001

dimensions	**90x70** cm
height	**90** cm
weight	**33** kg

460-S-003

dimensions	**90x70** cm
height	**90** cm
weight	**30** kg

KITCHEN EXAMPLES

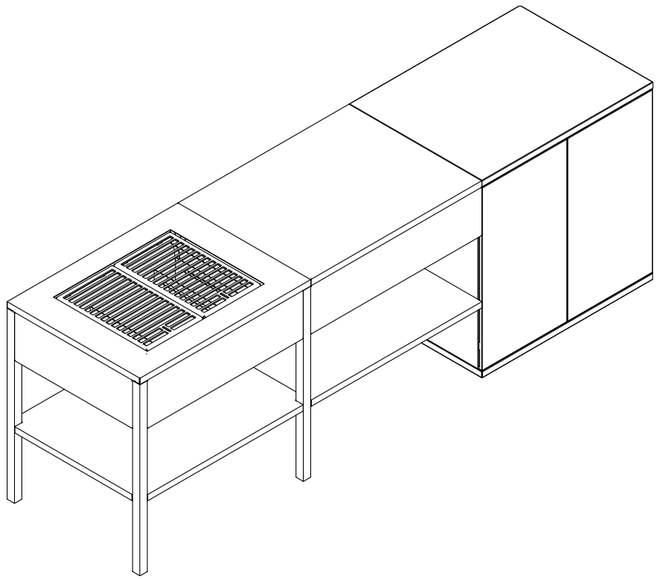

MODULE USED

460-S-001

dimensions	**90x70** cm
height	**90** cm
weight	**33** kg

460-S-003

dimensions	**90x70** cm
height	**90** cm
weight	**30** kg

460-S-013

dimensions	**90x70** cm	**120x70** cm
height	**90** cm	**90** cm
weight	**62** kg	**62** kg

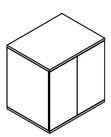

KITCHEN EXAMPLES

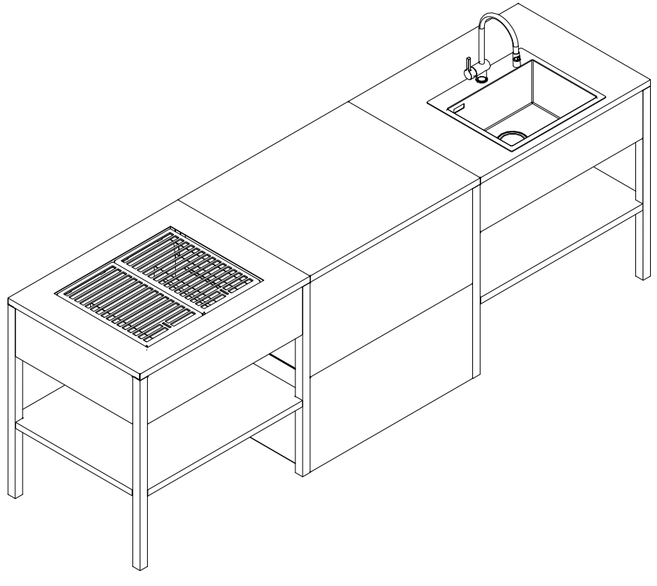

MODULE USED

460-S-001

dimensions	**90x70** cm
height	**90** cm
weight	**33** kg

460-S-017

dimensions	**70x70** cm
height	**90** cm
weight	**50** kg

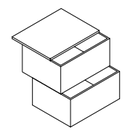

460-S-002

dimensions	**90x70** cm
height	**90** cm
weight	**30** kg

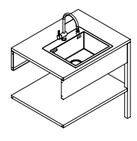

KITCHEN EXAMPLES

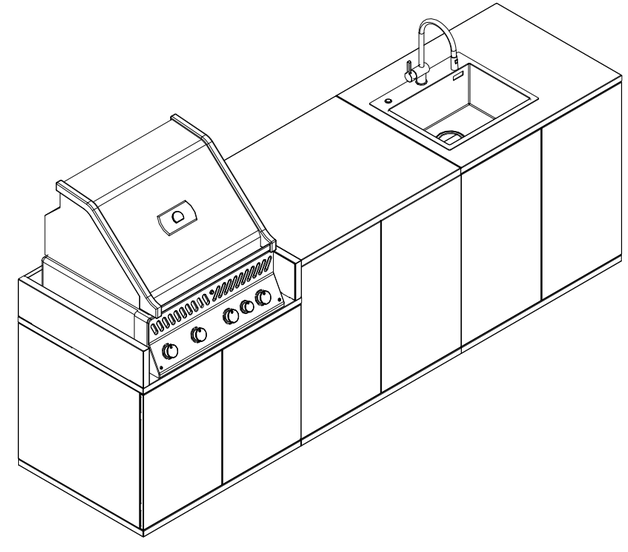

MODULE USED

460-S-015

dimensions	**90x70** cm
height	**90** cm
weight	**60** kg

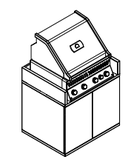

460-S-013

dimensions	**90x70** cm	**120x70** cm
height	**90** cm	**90** cm
weight	**60** kg	**82** kg

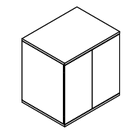

460-S-014

dimensions	**90x70** cm
height	**90** cm
weight	**60** kg

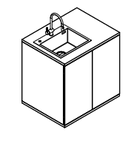

KITCHEN EXAMPLES

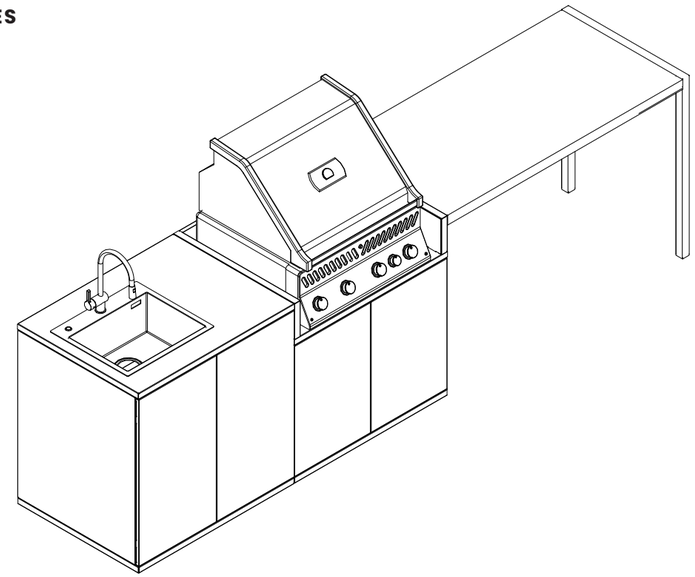

MODULE USED

460-S-014

dimensions	**90x70** cm
height	**90** cm
weight	**62** kg

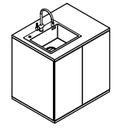

460-S-015

dimensions	**90x70** cm
height	**90** cm
weight	**60** kg

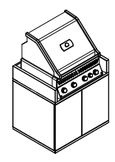

460-S-008

dimensions	**140x70** cm
height	**90** cm
weight	**25** kg

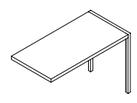

KITCHEN EXAMPLES

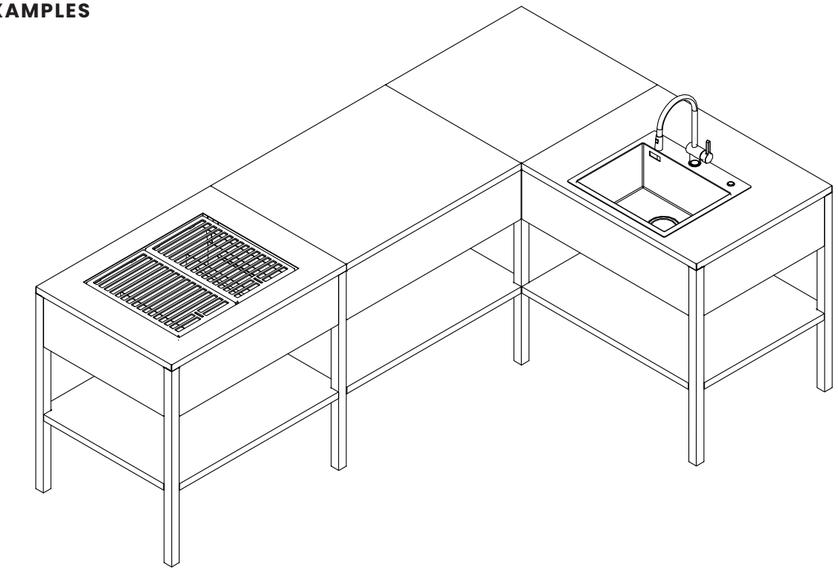

MODULE USED

460-S-001

dimensions	**90x70** cm
height	**90** cm
weight	**33** kg

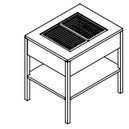

460-S-003

dimensions	**90x70** cm
height	**90** cm
weight	**30** kg

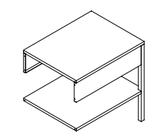

460-S-006

dimensions	**70x70** cm
height	**90** cm
weight	**25** kg

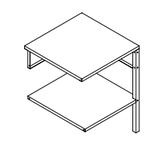

460-S-002

dimensions	**90x70** cm
height	**90** cm
weight	**30** kg

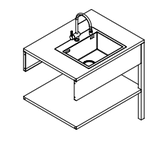

KITCHEN EXAMPLES

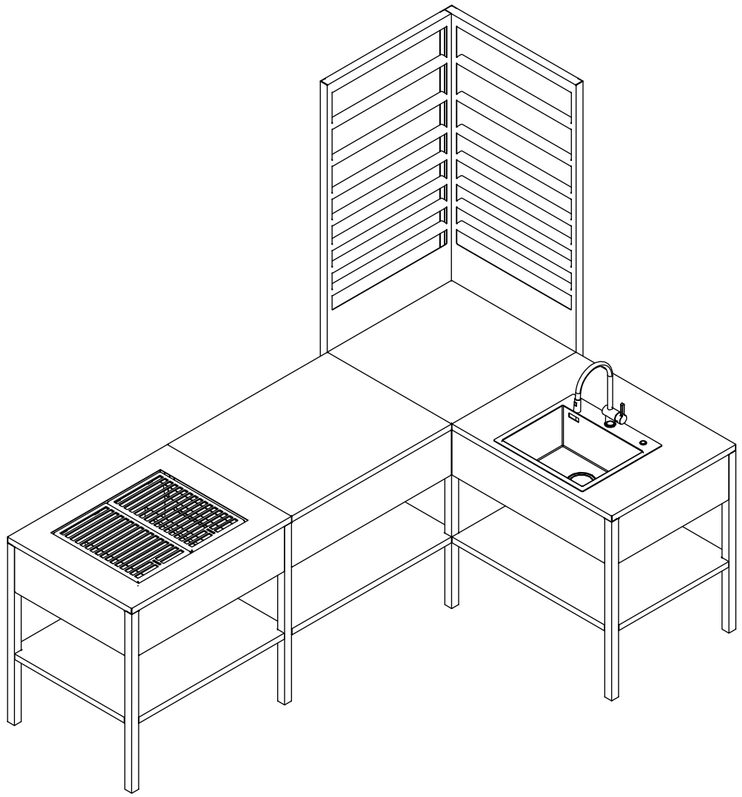

MODULE USED

460-S-001

dimensions	**90x70** cm
height	**90** cm
weight	**33** kg

460-S-003

dimensions	**90x70** cm
height	**90** cm
weight	**30** kg

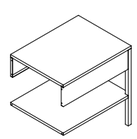

460-S-006

dimensions	**70x70** cm
height	**90** cm
weight	**25** kg

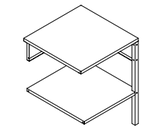

460-S-002

dimensions	**90x70** cm
height	**90** cm
weight	**30** kg

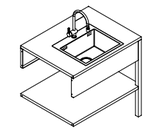

460-S-011

dimensions	**70x74** cm
height	**220** cm
weight	**40** kg

KITCHEN EXAMPLES

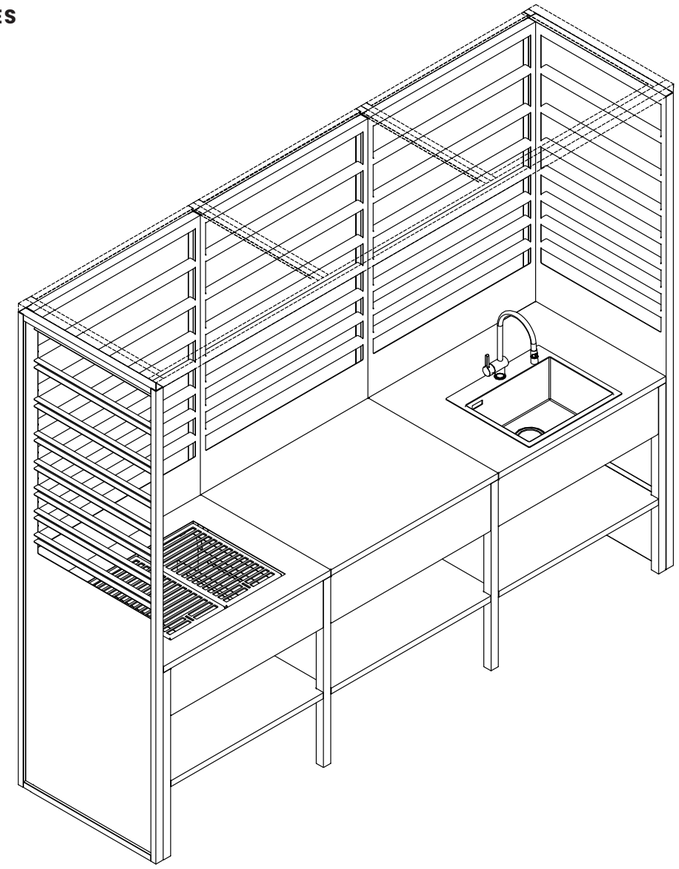

MODULE USED

460-S-001

dimensions	**90x70** cm
height	**90** cm
weight	**33** kg

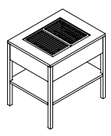

460-S-003

dimensions	**90x70** cm
height	**90** cm
weight	**30** kg

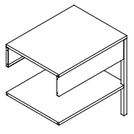

460-S-002

dimensions	**90x70** cm
height	**90** cm
weight	**30** kg

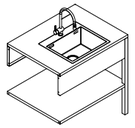

460-S-009

lenght	**90** cm
height	**220** cm
weight	**20** kg

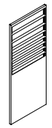

460-S-0012

lenght	**74** cm
height	**220** cm
weight	**17** kg

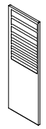

460-S-018

dimensions	**270x70** cm
weight	**25** kg

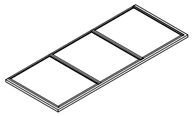

KITCHEN EXAMPLES

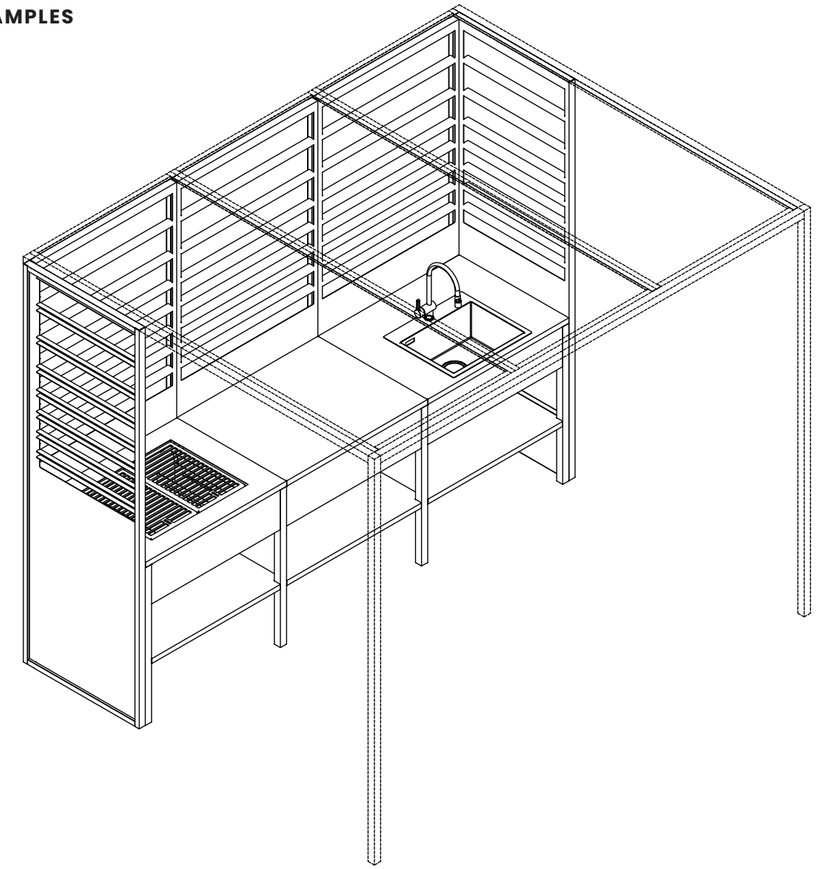

MODULE USED

460-S-001

dimensions	**90x70** cm
height	**90** cm
weight	**33** kg

460-S-003

dimensions	**90x70** cm
height	**90** cm
weight	**30** kg

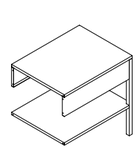

460-S-002

dimensions	**90x70** cm
height	**90** cm
weight	**30** kg

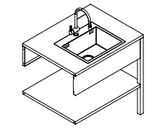

460-S-009

lenght	**90** cm
height	**220** cm
weight	**20** kg

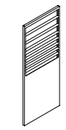

460-S-0012

lenght	**74** cm
height	**220** cm
weight	**17** kg

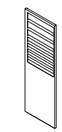

460-S-019

dimensions	**270x200** cm
height	**220** cm
weight	**70** kg

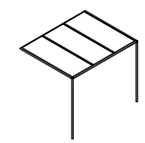

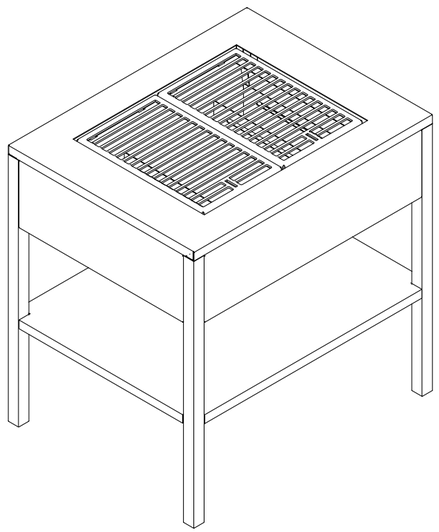

460-S-001	grill module
dimensions	**90x70** cm
height	**90** cm
weight	**33** kg
included	**grill**

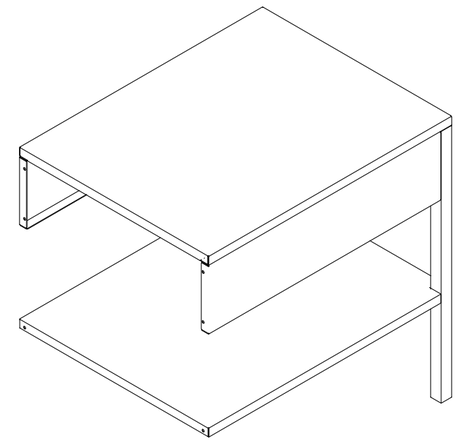

460-S-003	top module
dimensions	**90x70** cm
height	**90** cm
weight	**30** kg

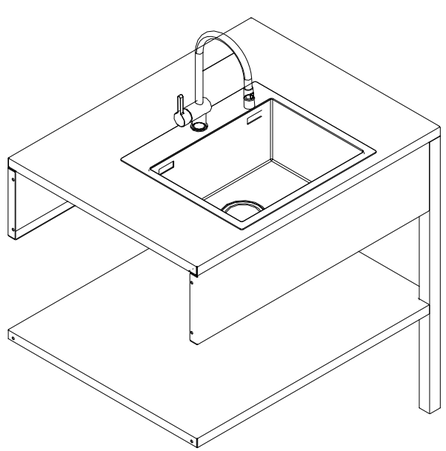

460-S-002	sink module
dimensions	**90x70** cm
height	**90** cm
weight	**30** kg
included	**sink**
optional	**faucet**

460-S-004	gres module
dimensions	**90x70** cm
height	**90** cm
weight	**55** kg
included	**gres**

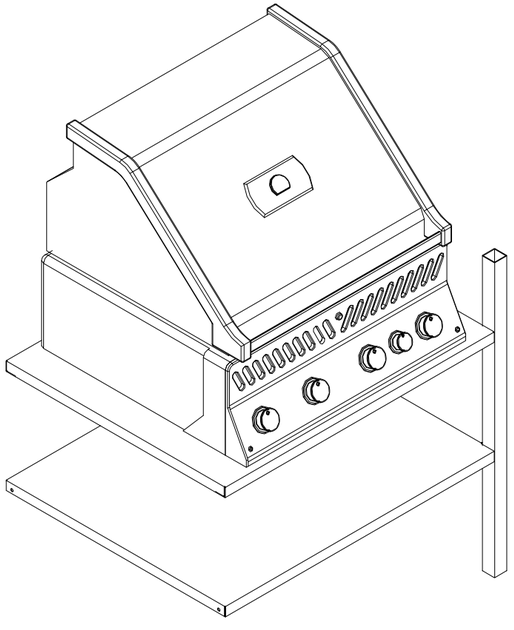

460-S-005 **barbecue module**

dimensions	**90x70** cm
height	**90** cm
weight	**20** kg
optional	**barbecue**

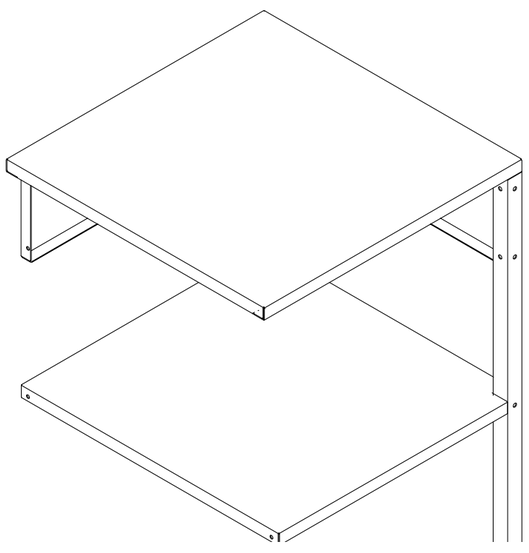

460-S-006 **corner module**

dimensions	**90x70** cm
height	**90** cm
weight	**30** kg

KITCHEN MODULES

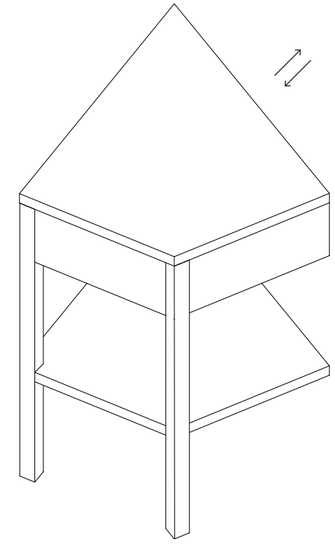

460-S-007 **custom corner module**

dimensions	**customxcustom** cm
height	**90** cm
weight	**30** kg

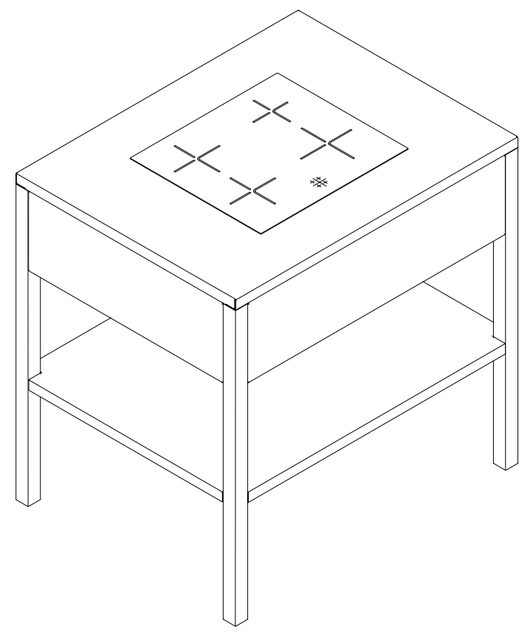

460-S-022 **induction module**

dimensions	**90x70** cm
height	**90** cm
weight	**40** kg
included	**induction hob**

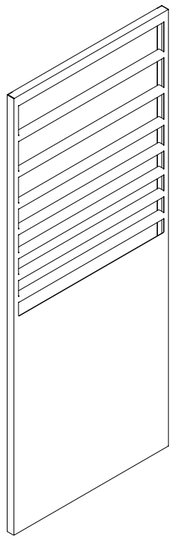

460-S-009	frangi90 module
length	**90** cm
height	**220** cm
weight	**20** kg

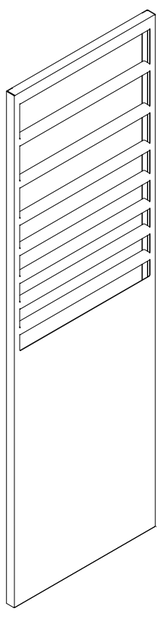

460-S-010	frangi70 module
length	**70** cm
height	**220** cm
weight	**16** kg

KITCHEN MODULES

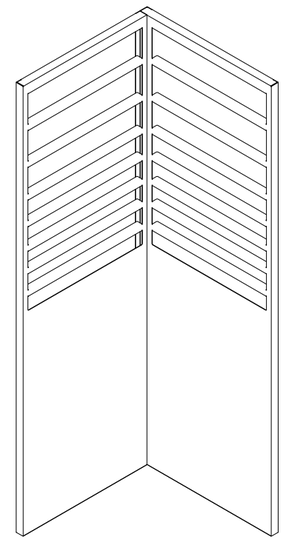

460-S-011	frangi corner module
dimensions	**70x74** cm
height	**220** cm
weight	**40** kg

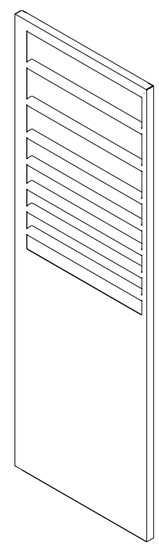

460-S-012	frangi linear corner module
length	**74** cm
height	**220** cm
weight	**17** kg

KITCHEN MODULES

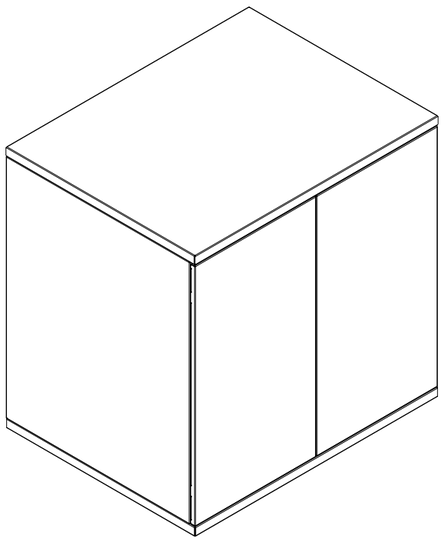

460-S-013	closed module
dimensions	**90x70** cm
height	**90** cm
weight	**62** kg

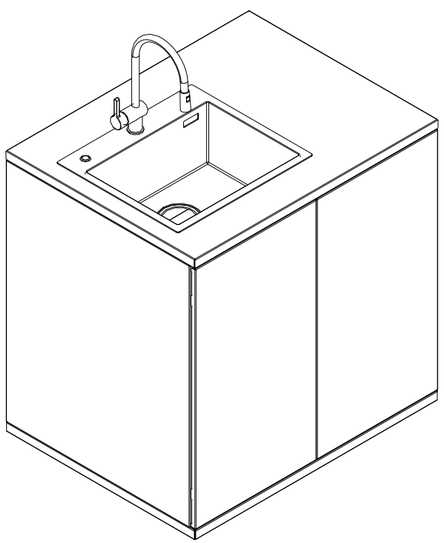

460-S-014	closed sink module
dimensions	**90x70** cm
height	**90** cm
weight	**62** kg
included	**sink**
optional	**faucet**

KITCHEN MODULES

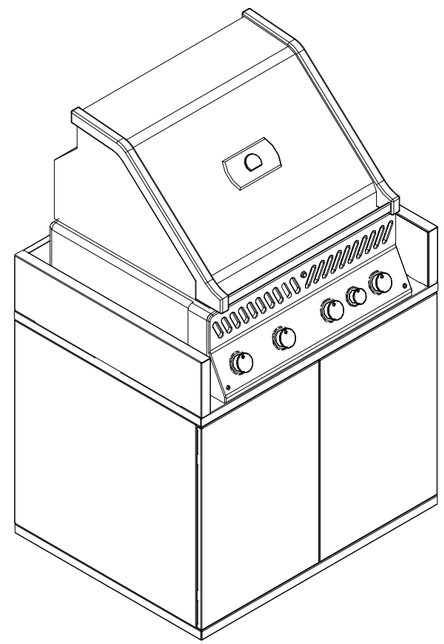

460-S-015	closed grill module
dimensions	**90x70** cm
height	**90** cm
weight	**30** kg
optional	**barbecue**

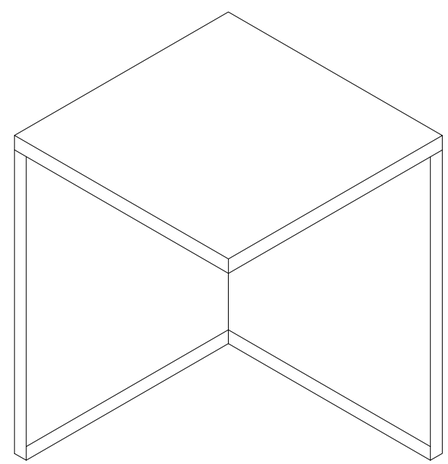

460-S-016	closed corner module
dimensions	**70x70** cm
height	**90** cm
weight	**40** kg

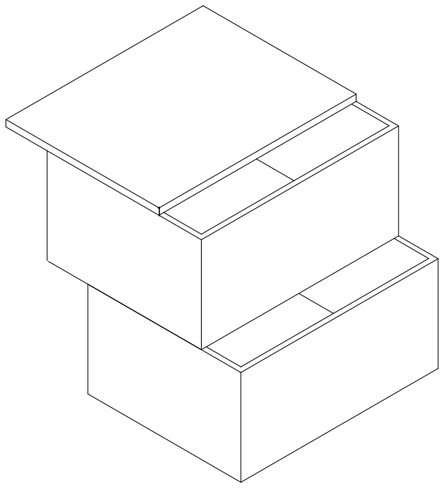

460-S-017	drawer module
dimensions	**70x70** cm
height	**90** cm
weight	**55** kg

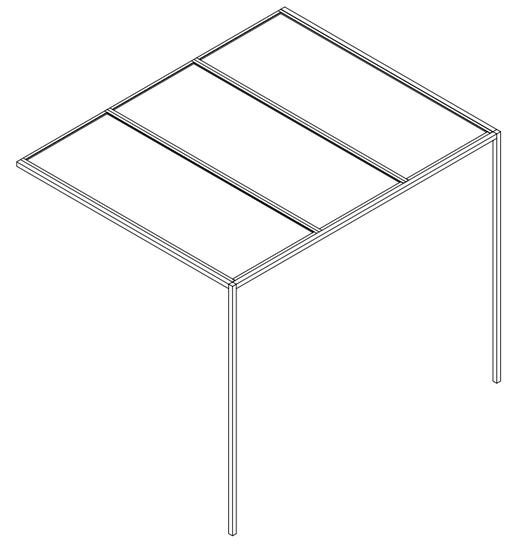

460-S-019	pergola module
dimensions	**270x200** cm
height	**220** cm
weight	**70** kg

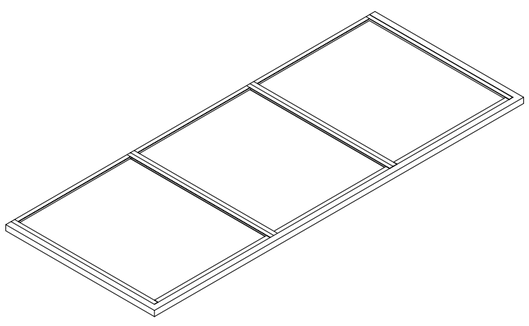

460-S-018	coverage module
dimensions	**270x70** cm
weight	**25** kg

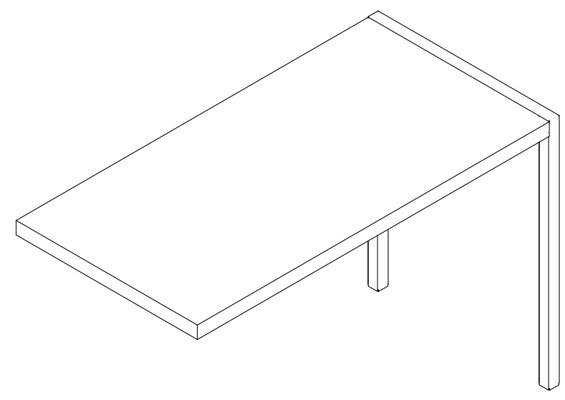

460-S-008	table module
dimensions	**140x70** cm
height	**90** cm
weight	**25** kg

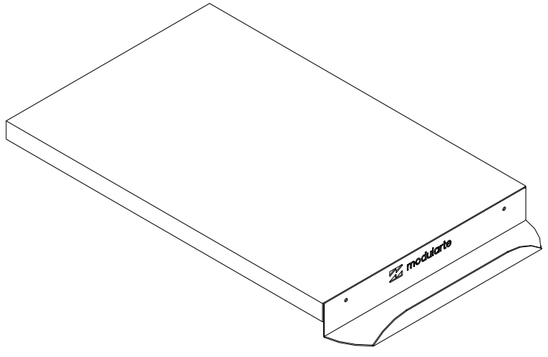

460-S-020	chopping board
dimensions	**45x70** cm
height	**3.5** cm
weight	**3** kg

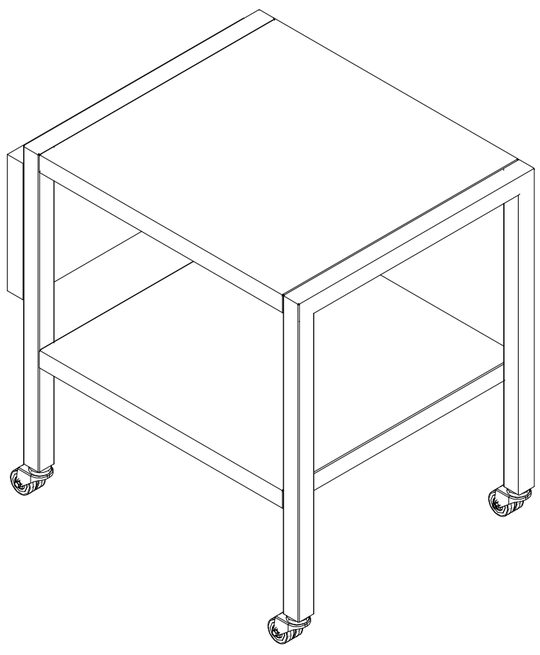

460-S-021	coffe table
dimensions	**60x70** cm
height	**70** cm
weight	**25** kg

KITCHEN ACCESSORIES

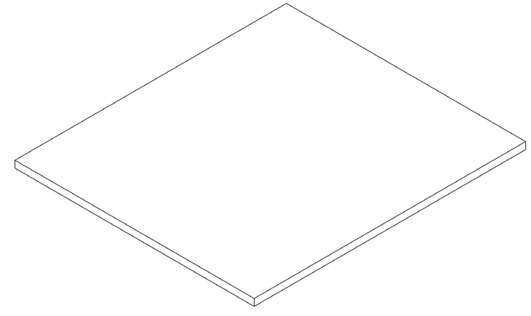

460-S-023	cover induction hob
dimensions	**60.5x53.5** cm
height	**2** cm
weight	**0.5** kg

POSSIBLE DECORATION FRANGI

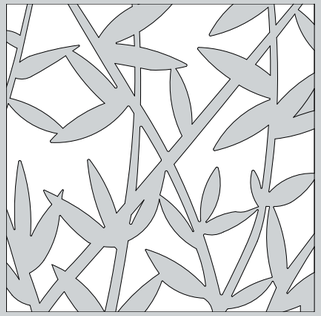
01

02

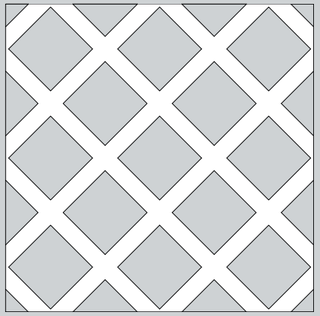
03

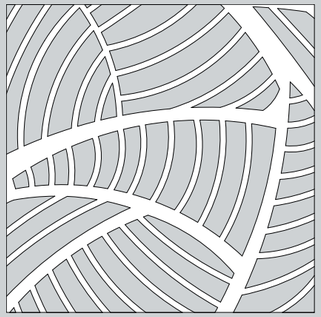
04

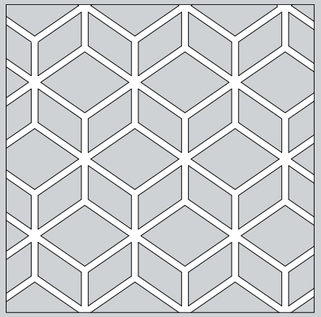
05

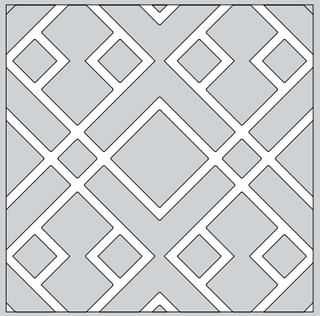
06

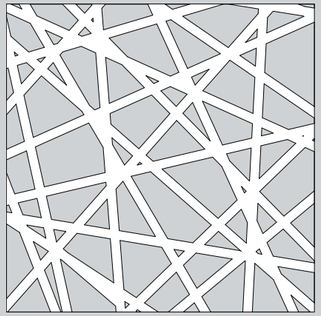
08

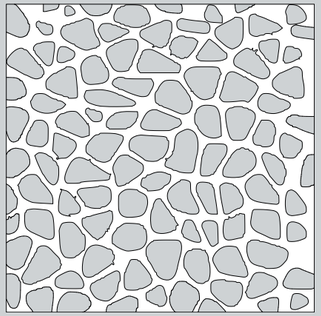
09

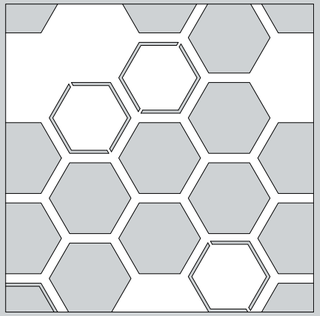
10

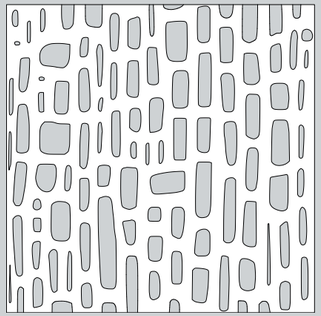
11

12

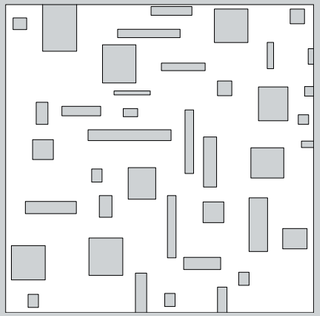
13

POSSIBLE DECORATION FRANGI

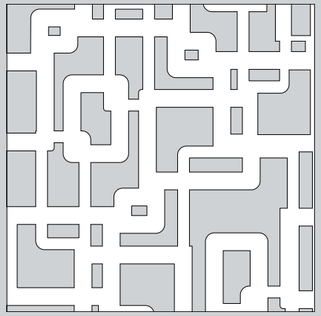
14

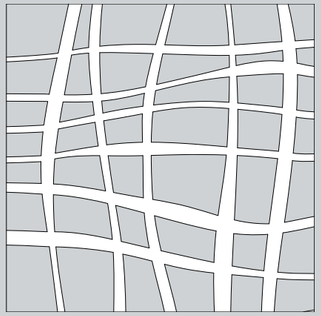
15

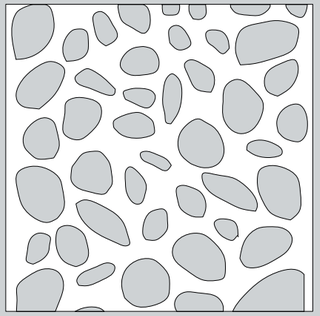
16

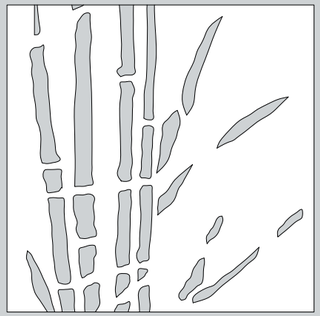
17

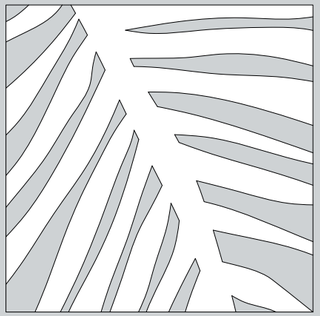
18

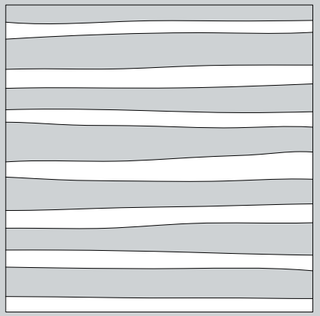
19

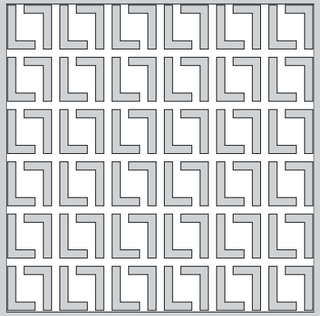
20

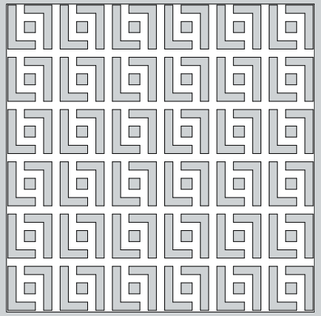
21

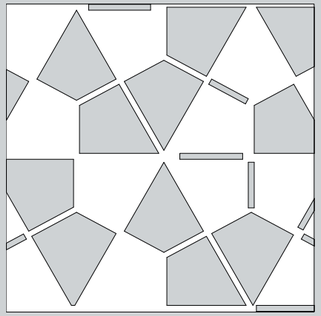
23

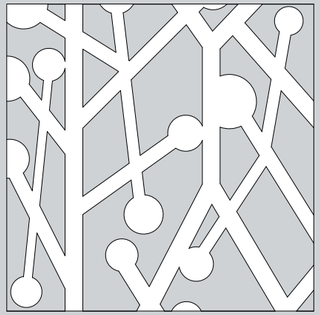
24

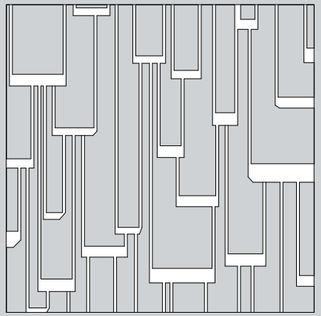
25

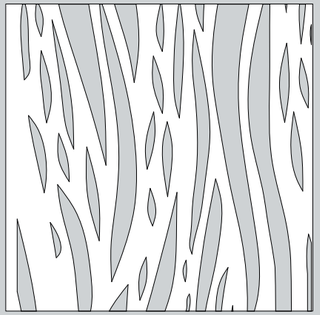
26

POSSIBLE DECORATION FRANGIS

01

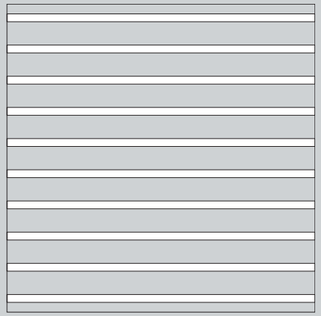

02

03

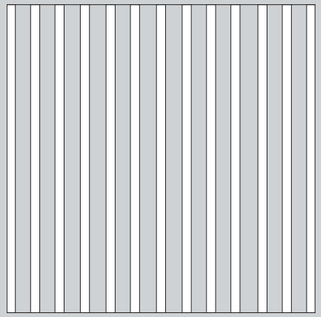

04

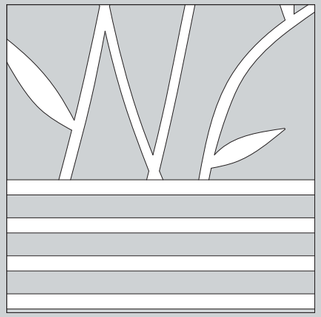

05

GRES

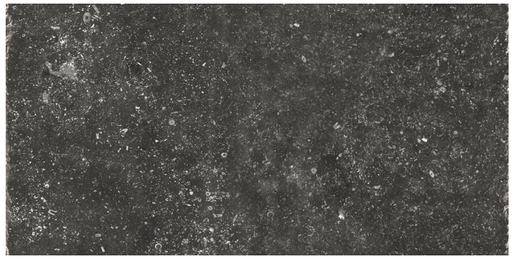
NAMUR

MATTONE

GRIS FONCE

POMICE

LIMO

OPAL CARVED

Characteristics and properties of porcelain stoneware	Standards	According to the rules UNI EN 14411 G			Compliance		
Surface Quality	ISO 10545-2	95% Min of the tiles must be free from visible defects			Compliant with standards		
		N ≥ 15 cm	N ≥ 15 cm	Risultati Test			
Maximum deviation straightness in%	ISO 10545-2	± 0,5 %	± 1,5 mm	± 0,10 %	Compliant with standards		
Permissible deviation in% of the average thickness of each tile from the manufacturing size	ISO 10545-2	± 0,5 %	± 0,5 mm	± 5 %	Compliant with standards		
Maximum deviation of orthogonality in%	ISO 10545-2	± 0,5 %	± 2,0 mm	± 0,20 %	Compliant with standards		
Planarity	ISO 10545-2	± 0,5 %	± 2,0 mm	± 0,35 %	Compliant with standards		
Length and width	ISO 10545-2	± 0,6 %	± 2,0 mm	± 0,15 %	Compliant with standards		
Water absorption	ISO 10545-3	≤ 0,5 %			E < = 0,04 %		
Flexural strength	ISO 10545-4	R ≥ 35 N/mm^2			53 N/mm^2		
Impact resistance	ISO 10545-5	Declared value			0,88		
Deep abrasion resistance	ISO 10545-6	≤ 175 mm^3			<1 28 mm^3		
Coeff. of dilation Linear thermal	ISO 10545-8	–			$\alpha = 7x10^{-6}/°C^{-1}$		
Resistance to thermal shocks	ISO 10545-9	Test passed according to EN ISO 10545-1			No damage		
Frost resistance	ISO 10545-12	Test passed according to EN ISO 10545-1			No damage		
Resistance to chemicals	ISO 10545-13	UB MIN.			UA ULA UHA		
Stain resistance	ISO 10545-14	Declared value			Class 5		
Fire resistant	EN 13501-1	Declared value			Class A1 - A1 FL		
					NAT	GRIP	*
Slip resistance	B.C.R. C.A. B.C.R. G.B D. M. 236 DEL 4.6 1989	> 0,40			Compliant	Compliant	Compliant
	ASTM C 1028/07 BOT 3000	Dry SCOF > 0,60			Compliant	Compliant	Compliant
	ASTM C 1028/07 BOT 3000	Wet SCOF > 0,60			Compliant	Compliant	Compliant
	ANSI A137.1 BOT 3000	Wet DCOF > 0,42			Compliant	Compliant	Compliant
	DIN 51130	–			R10	R11	R11
	DIN 51097	–			A	A+B+C	A+B+C
	ENV 12633	≥ CL 1			Compliant	Compliant	Compliant
	UNI EN 13036 - 4 2011	≥ 36			Compliant	Compliant	Compliant
Color stability to light and U.V.	DIN 51094	Declared value			Compliant with standards, no variations		
Static load	EN 12825	Declared value			Center 9,6 KN / Center side 6,5 KN / Diagonal 8,19 KN (Class 3)		
Dynamic load, hard body impact test	EN 12825	Declared value			Failed test		
Dynamic load, soft body impact test	EN 12825	Declared value			Failed test		
Flexural strength, breaking load in N	EN 1339	Kn 14,38			Class U14		
Breaking load in MPA	EN 1339	–			MPA 46,5		

MATERIALS

STAINLESS STEEL

ALUMINUM

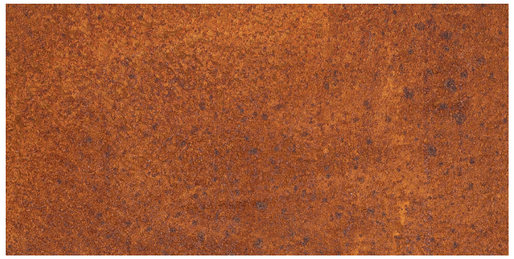
CORTEN

COLORS

all colors are included for kitchen - for bbq series just N1 and corten are included.

WHITE - B1

IVORY - B2

DARK BROWN - M3

BLACK - N1

LIGHT GREY - G1

GREY - G4

COLORS

all colors are included for kitchen - for bbq series just N1 and corten are included.

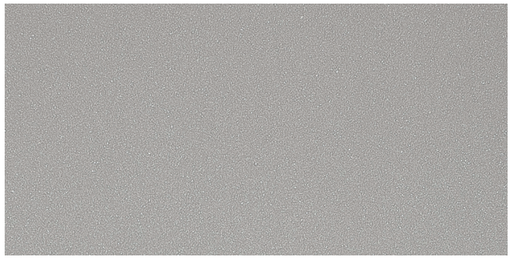
TAUPE - M1

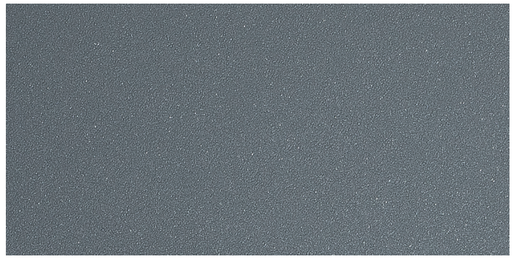
LIGHT GREY - G2

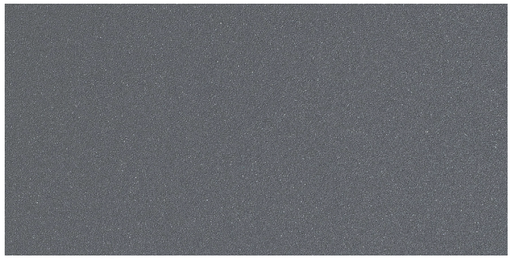
CEMENT GREY - G5

DARK GREY - G3

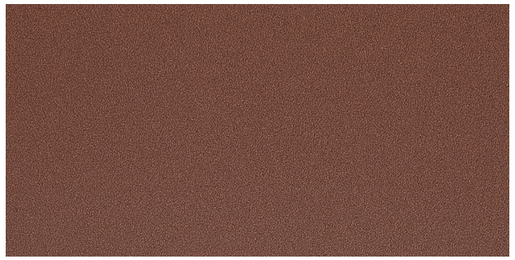
RUST - M2

DARK BROWN M4

Modularte Srl

modularte.it

Via Tabacchi, 125
41123 Modena, MO, Italy.
info@modularte.it
info: +39 059 82 13 81
assistenza: +39 059 71 11 056